The current issue and full text archive of this journal is available on Emerald Insight at:
https://www.emerald.com/insight/2635-1374.htm

Received 5 May 2025
Revised 17 June 2025
24 June 2025
27 June 2025
Accepted 27 June 2025

Forecasting stock market behavior in BRICS economies using artificial neural machine learning models

Shrikant Panigrahi
Department of Economics and Finance, University of Bahrain, Sakhir, Kingdom of Bahrain
Gagan Kukreja
Department of Accounting, University of Bahrain, Sakhir, Kingdom of Bahrain, and
Sumathi Kumaraswamy
Department of Economics and Finance, University of Bahrain, Sakhir, Kingdom of Bahrain

Abstract

Purpose – This study aims to forecast the stock market behavior of BRICS nations (Brazil, Russia, India, China and South Africa) using advanced machine learning models. The focus is on identifying market trends, predicting future index prices and analyzing returns.

Design/methodology/approach – The research applies long short-term memory (LSTM) neural networks and seasonal auto-regressive integrated moving average with exogenous variables (SARIMAX) to analyze daily stock index data from 2010 to 2023. Forecast accuracy is assessed using standard performance metrics, including root mean square error (RMSE), mean absolute error (MAE) and mean absolute percentage error (MAPE).

Findings – LSTM model results produced positive return forecasts for Brazil, India and South Africa, while Russia and China exhibited negative returns or stagnant trends. SARIMAX forecasts predominantly indicated neutral or negative returns. India and China demonstrated higher prediction accuracy, with lower error rates across all metrics. The study reveals notable differences in forecasting performance between the two models.

Research limitations/implications – The comparative results presented here support the growing body of evidence suggesting that neural networks are more suitable for forecasting in complex financial systems, especially when market conditions are influenced by both macroeconomic factors and investor behavior.

Practical implications – The results suggest that investors seeking data-driven forecasting in emerging markets should prioritize markets like India and China, where LSTM shows high reliability. For policymakers, the findings reinforce the importance of improving data transparency and regulatory stability to improve market predictability and investor confidence.

Originality/value – This study contributes to the literature by combining deep learning and traditional time series forecasting methods to evaluate post-crisis stock market dynamics in emerging economies. The insights offer actionable insights for investors and policymakers aiming to optimize portfolios and design informed investment strategies in BRICS markets.

Keywords BRICS, Stock market forecasting, LSTM, SARIMAX, Neural networks, Machine learning, Financial markets

Paper type Research article

1. Introduction

The stock market plays a critical role in influencing economic activity, and accurate market prediction is of great interest to investors (Challa *et al*., 2020). Even though the stock market is not a mirror of the economy, it is a leading indicator representing economic growth. Stock market volatility is driven by various factors such as company news and financial results,

Journal of Business and Socio-economic Development
Vol. 6 No. 1, 2026
pp. 70-89
Emerald Publishing Limited
e-ISSN: 2635-1692
p-ISSN: 2635-1374
DOI 10.1108/JBSED-05-2025-0134

© Shrikant Panigrahi, Gagan Kukreja and Sumathi Kumaraswamy. Published in *Journal of Business and Socio-economic Development*. Published by Emerald Publishing Limited. This article is published under the Creative Commons Attribution (CC BY 4.0) licence. Anyone may reproduce, distribute, translate and create derivative works of this article (for both commercial and non-commercial purposes), subject to full attribution to the original publication and authors. The full terms of this licence may be seen at Link to the terms of the CC BY 4.0 licence.

Conflict of interest: The author states that he has no conflicts of interest.

Downloaded from http://www.emerald.com/jbsed/article-pdf/6/1/70/10049847/jbsed-05-2025-0134en.pdf by guest on 06 February 2026

industry performance, investor sentiments, regulatory issues, economic factors, and geopolitical environment. Stock market performance is inherently difficult to predict in the current social, economic, and geopolitical environment. The COVID-19 pandemic has reshaped global economies through multiple channels; for example, global economic power has shifted in favor of developing countries (Kamin and Langhammer, 2024). The increasing economic weight of BRICS nations, especially in the post-COVID-19 era and amid shifting geopolitical dynamics, highlights the urgent need for reliable stock market forecasting. Investors and policymakers require robust predictive models to navigate the uncertainties of these rapidly evolving markets. While individual BRICS markets have been studied in isolation—e.g. India (Pathak and Shetty, 2019), China (Chen *et al*., 2024; Jin and Xu, 2024), Brazil (Carosia *et al*., 2024), South Africa (Naeem *et al*., 2024)— comparative multi-country forecasting using advanced machine learning models remains rare. This study addresses this gap, offering comprehensive insights that can guide investment strategies in emerging markets.

Recent global events like the financial crisis of 2008 and the COVID-19 pandemic have created substantial challenges and disruptions to the financial markets, leading to greater uncertainty and volatility. These disruptions have reshaped market dynamics, particularly in emerging economies, making reliable forecasting models more important than ever (Cevik *et al*., 2022). Traditional forecasting approaches often struggle with the complex and non-linear behavior of stock markets, especially under such volatile conditions (Nabipour *et al*., 2020). Furthermore, Jiang (2021) provided an overview of the need for deep learning to handle stock market complexity that traditional models struggle with. This highlights the need for advanced forecasting techniques that can better capture market patterns and support more informed investment strategies.

This study addresses this need by applying and comparing two distinct forecasting approaches – Long Short-Term Memory (LSTM) neural networks and Seasonal Auto-Regressive Integrated Moving Average with Exogenous Variables (SARIMAX) models – to stock market indices across all BRICS nations. Unlike many previous studies that focused on individual countries or used a single model, this research offers a comparative, multi-country analysis over an extended period of 2010–2023. The study aims to provide practical insights into the predictive strengths of modern deep learning models relative to traditional statistical techniques in emerging markets. These findings can inform investment decisions and policy formulation to improve risk management, portfolio allocation, and market stability efforts in BRICS economies.

This paper is one of the *first studies* to offer a *multi-country, model-comparative approach* using neural and statistical models to guide financial decision-making in emerging economies. While past studies have often focused on individual countries or shorter time frames, this paper stands out by: (1) Integrating LSTM with SARIMAX to compare the performance of nonlinear deep learning models against traditional time series models in a comprehensive side-by-side evaluation, and (2) Applying model performance metrics —Root Mean Square Error (RMSE), Mean Absolute Error (MAE), and Mean Absolute Percentage Error (MAPE)—across five emerging markets to assess forecasting reliability and accuracy, (3) Providing actionable investment insights for each BRICS country, identifying which markets offer favorable conditions based on predictive modeling, and (4) Highlighting the comparative stability and predictability of the Indian and Chinese markets, suggesting their potential as stronger investment anchors in the BRICS bloc.

This paper contributes to the literature in several ways. First, this study extends the literature on the impact of the financial crisis and the COVID-19 pandemic on stock market performance. Although many studies have investigated the relationship, to the best of our knowledge (Insaidoo *et al*., 2021; Ngwakwe, 2020), none have examined future stock market predictions following financial shocks using deep learning and machine learning models. Due to the unpredictable behavior of the market, it becomes difficult for investors to obtain high returns on their investments. This framework will motivate them to understand the real-time market scenarios based on machine learning models. The study results may prove useful to investors in comparing the performance of the stock markets in these countries and informing their investment decisions. This will significantly impact their portfolio optimization and the application of successful trading tactics.

Downloaded from http://www.emerald.com/jbsed/article-pdf/6/1/70/10049847/jbsed-05-2025-0134en.pdf by guest on 06 February 2026

The rest of the paper is written as follows: Section 2 highlights the rising economic power of BRICS and its implications. Section 3 summarizes previous literature on machine learning models comprehensively. The workflow of machine learning models and the steps to train and test the data are discussed in Section 4. Section 5 provides the comparative and predictive results between LSTM and SARIMAX models. Section 6 discusses the results and implications of the current paper. The conclusion is presented in Section 7.

2. The economic ascent of BRICS nations

BRICS nations represent a substantial economic powerhouse, accounting for nearly 32% of global GDP in purchasing power parity (PPP) terms (Kamin and Langhammer, 2024). From 1990 to 2022, the average annual per capita growth rate for the G7 was 1.5%, compared with 4.5% for BRICS nations. As shown in Figure 1, the share of the G7 in global GDP has been steadily declining, mirroring a corresponding rise in the contributions of the BRICS economies. Within the BRICS nations, in 2022, China contributed 18.4% of world GDP, followed by India with 7.26%, Russia at 2.91%, Brazil at 2.34%, and South Africa with the lowest share at 0.58%. The 2008 global financial crisis deteriorated the economic conditions of developing countries, resulting in a decline in international trade and growth rates across all economies (Agarwal *et al*., 2022). Economic and financial crises can significantly influence stock market performance (Carp, 2012). BRICS countries are major contributors to the world economy, accounting for over 40% of the global population and controlling 26% of global GDP. Over the next 50 years, the BRICS nations are projected to emerge as key players in the global economy (Agarwal *et al*., 2022).

The G7 contribution to the global GDP has dropped to 30%, while the current BRICS five account for 31.5%. By 2030, the BRICS are projected to account for more than 50% of the world economy, and the proposed enlargement will likely accelerate that contribution.

Figure 2 shows the price movement of the BRICS nations' stock indices for the selected period. In this context, it is necessary to ascertain whether the financial crisis resulted in a sharp

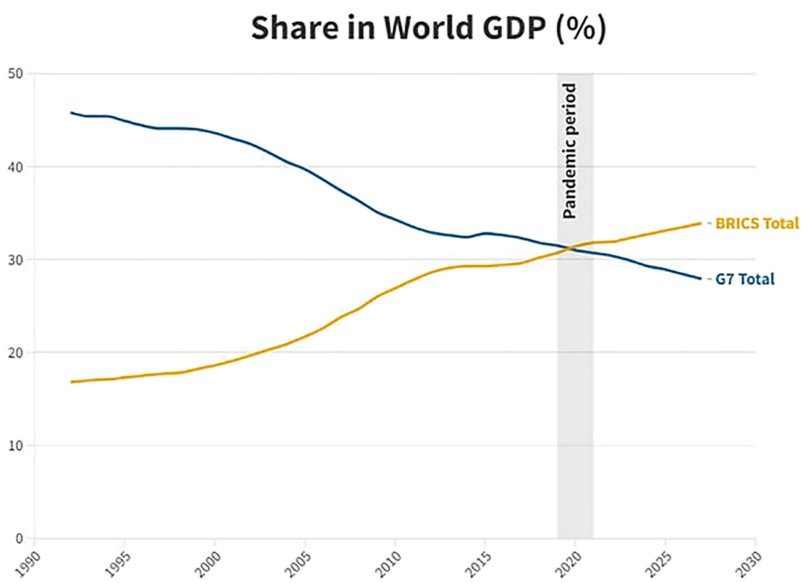

Figure 1. Comparing GDP growth based on US$ in PPP between BRICS (31.5%) and G7 (30%) as of 2023.
Source: International Monetary Fund-GDP based on US$ PPP, and *The Print*

Downloaded from http://www.emerald.com/jbsed/article-pdf/6/1/70/10049847/jbsed-05-2025-0134en.pdf by guest on 06 February 2026

swing in stock market performance. The market was relatively flat after the 2008–2009 financial crisis, and then after 2015, it started moving upward in a more consistent trend. The COVID-19 pandemic in 2020 placed over 2 billion people under isolation, with tremendous economic and financial consequences. This contagion effect significantly disturbed economies, resulting in a dramatic shrinkage in global financial conditions. Following such a severe global pandemic, the fear of losing profits led to 6 trillion USD in losses in the global stock market. The COVID-19 pandemic created unprecedented challenges and increased uncertainty in financial markets (Cevik *et al*., 2022).

The Bovespa Index of Brazil is heavily influenced by the country's political stability and the government's economic policies, which often lead to changes in stock prices and investor sentiment. Volatility in commodity markets directly influences the related sectors and may subsequently impact overall stock market performance and investors' confidence.

The MOEX Russia Index is closely tied to geopolitical tensions and relations with other countries, particularly Western nations. Political events and sanctions can significantly affect investor confidence and stock prices. Given Russia's status as one of the major exporters of oil and natural gas, fluctuations in energy prices have a substantial impact on the country's economy and stock market performance.

India's stock market (Nifty 50) movements are closely linked with the country's economic growth prospects. Investors monitor GDP growth rates, industrial production figures, and consumer spending trends to gauge market sentiment. Policy decisions and reforms implemented by the Indian government can have significant effects on various sectors of the economy, thereby impacting stock prices.

Similarly, China's stock market is also heavily influenced by government regulations and policies. Changes in regulations, particularly those related to industry, finance, and foreign investment, can impact investor sentiment and stock prices. Trade tensions with the US and

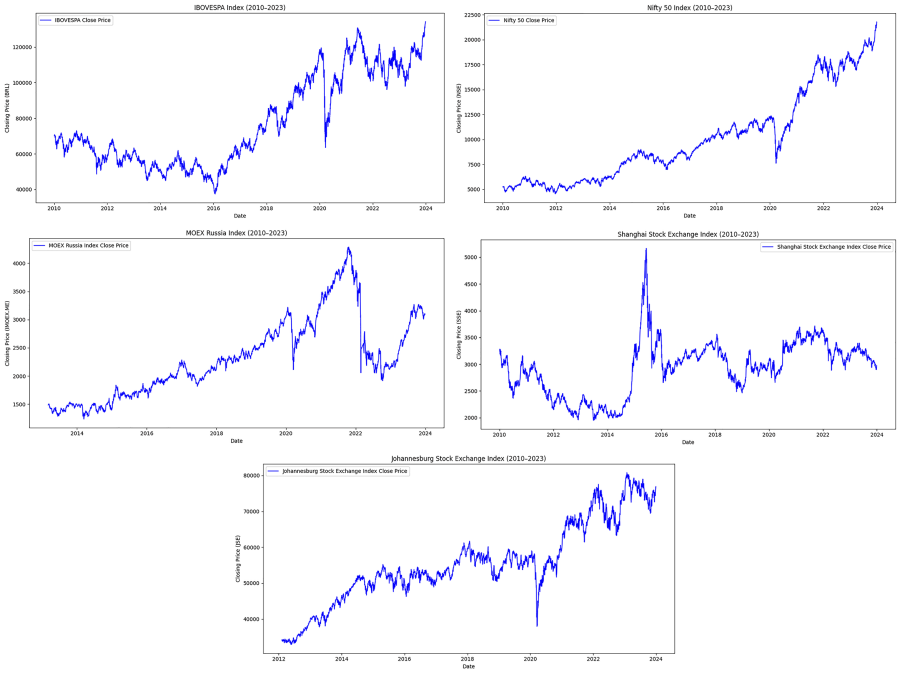

Figure 2. Historical stock price movements for BRICS nations for the period 2010–2023. **Source**: Prepared by authors

Downloaded from http://www.emerald.com/jbsed/article-pdf/6/1/70/10049847/jbsed-05-2025-0134en.pdf by guest on 06 February 2026

other major trading partners exert pronounced effects on investor confidence and stock market performance in China.

Finally, South Africa's stock market is heavily influenced by commodity prices, particularly gold, platinum, and coal. Fluctuations in commodity prices directly affect the profitability of companies in related sectors, thereby influencing stock prices.

It is, therefore, not surprising that volatility patterns across different economies exhibit variation, even when exposed to similar shocks. However, there are divergent generalizations in previous studies focusing on stock market performance and its predictions. Consequently, there is a notable shortage of studies focusing on developing and emerging markets, particularly those comparing returns and volatility. Geopolitical tensions and information asymmetry in markets are key reasons for such fluctuations, which are especially challenging for millions of retail investors. Therefore, predicting the stock market performance of the BRICS nations using dynamic machine learning models constitutes a novel contribution to the existing literature.

3. Previous studies on stock market prediction

Theoretical and empirical research has revealed a strong relationship between economic growth and stock market performance (Challa *et al*., 2020; Liu and Sinclair, 2008; Marques *et al*., 2013). However, investor sentiment plays an important role in driving stock returns. Hence, forecasting stock market performance is a highly complex task. In an efficient market, asset prices fully reflect all available information and never deviate from their true value (Fama, 1970). The main purpose of forecasting the stock market is to support investment choices, increase investor accuracy, and enhance investment returns. Accurate forecasting is the most challenging element in this aspect. Many researchers focused on identifying the most effective forecasting instruments and techniques to generate fast and accurate stock market predictions (Akhtar *et al*., 2022; Liu *et al*., 2022; Nikou *et al*., 2019; Wang *et al*., 2022). Nabipour *et al*. (2020) argued that due to the long-term unpredictable nature of the stock market, the prediction process remains a challenge. Investment becomes risky because of the ambiguous nature of the stock price movements. Furthermore, governments typically find it challenging to determine the condition of the market. Since stock values are typically dynamic, non-parametric, and non-linear, they frequently undermine the performance of statistical models and limit their ability to generate accurate forecasts.

Analyzing trends in financial activity and forecasting their evolution are areas of significant interest to both academic and financial communities. Financial information, especially stock index data, is frequently treated as a time series influenced by a wide range of variables. These factors include macroeconomic influences, such as economic policies or gross domestic product, which exert long-term impacts on the market, and microeconomic variables, including random occurrences, irrational emotional shifts among investors, and market rumors (Panigrahi, 2023).

Various algorithms have been employed for stock price forecasting, such as neural networks, which utilize interconnected layers of neurons to train data, and support vector machines (SVMs), which forecast stock price movements using hyperplanes to separate classes. Also, methods like random forest, trained on multiple decision trees, and Naïve Bayes, which predicts stock movement based on probabilities, have likewise been applied. For instance, Patel *et al*. (2015) utilized ten years of historical data from Reliance and Infosys in their analysis. In a comprehensive study, Fischer and Krauss (2018) employed LSTM networks on components of the S&P 500 index spanning from 1992 to 2015. Their findings revealed that the LSTM-based approach outperformed traditional machine learning methods in forecasting out-of-sample directional movements. Similarly, Chen *et al*. (2015) utilized LSTM to forecast returns in the Chinese stock market, demonstrating a notable 13% improvement in accuracy compared to random prediction methods.

Several traditional econometric models have been utilized for time series forecasting, including the Autoregressive (AR) Model introduced by Akaike (1969), the Autoregressive

Downloaded from http://www.emerald.com/jbsed/article-pdf/6/1/70/10049847/jbsed-05-2025-0134en.pdf by guest on 06 February 2026

Moving Average (ARMA) Model (Xiao *et al*., 2020), the Generalized Autoregressive Conditional Heteroskedasticity (GARCH) Model (Pham and Yang, 2010), the Vector Autoregressive model (Jiang *et al*., 2013), and the Box–Jenkins model (Groda and Vrbka, 2017). These models have demonstrated effectiveness in predicting stock prices. However, in recent years, there has been a surge in the application of deep learning techniques across various domains.

There have been a handful of research studies on stock price prediction using machine learning models, as shown in Table 1. The table summarizes the methodology, key findings, limitations, and relevance of these studies to the current work. The review highlights that most

Table 1. Summary of key literature relevant to the study

Authors	Method	Key findings	Limitations	Relevance to this study
Challa *et al*. (2020)	Economic growth and stock performance	Identified a strong link between stock markets and economic growth	Did not address forecasting models	Justifies the need for forecasting models linked to economic analysis
Xiao *et al*. (2020)	AR, ARMA, GARCH, SARIMAX	Demonstrated usefulness for time series forecasting of stock prices	Relied on linear assumptions in volatile markets	Forms the basis for comparing SARIMAX with LSTM
Nikou *et al*. (2019)	ML methods (ANN, SVM, RF)	Found that ML models often outperform traditional models	Often applied to single stocks, not multi-country indices	Supports testing LSTM across BRICS markets
Fischer and Krauss (2018), Nabipour *et al*. (2020)	LSTM and deep learning	Reported that LSTM excels at forecasting complex market patterns	Focused mainly on developed markets and short time frames	Motivates testing LSTM for BRICS using long-term data
Jiang (2021)	Deep learning review	Summarized progress in deep learning stock forecasting	Highlighted focus on single markets or short periods	Highlights the gap for multi-country, long-term comparative studies
Wang *et al*. (2022)	Transformer models	Showed improved short-term stock index forecasts	Did not explore emerging markets or the BRICS context	Suggests an opportunity for advanced models in emerging markets
Sonkavde *et al*. (2023)	Systematic review of ML/DL in stock forecasting	Concluded that LSTM is among the best-performing models	Offered a limited comparative focus on BRICS or long-term data	Strengthens the rationale for this comparative study
Cevik *et al*. (2022)	COVID-19 market impact	Found increased market volatility and the need for better forecasting	Did not compare in the BRICS context	Supports the focus on post-crisis BRICS forecasting
Kamin and Langhammer (2024)	BRICS vs G7 economic power	Reported that BRICS are gaining global economic influence	Did not link economic power shifts to stock market forecasting	Justifies BRICS as the focus for a forecasting study
Kim and Won (2018)	Hybrid models (GARCH-LSTM, ARMA-GARCH-ANN)	Demonstrated that hybrid models improve forecasting accuracy	Rarely applied hybrid models to the BRICS multi-country datasets	Supports the exploration of hybrid models in a comparative context

Source(s): Compiled by authors

Downloaded from http://www.emerald.com/jbsed/article-pdf/6/1/70/10049847/jbsed-05-2025-0134en.pdf by guest on 06 February 2026

existing research focuses on single markets, shorter periods, or developed economies, and rarely compares traditional and deep learning models across multiple emerging markets. This gap forms the basis of our objective: to compare the forecasting performance of SARIMAX and LSTM models across BRICS nations over a long-term horizon.

Nabipour *et al*. (2020) attempted to forecast the stock market using a 10-year daily time series dataset, applying XGBoost, Adaboost, artificial neural networks (ANN), recurrent neural network (RNN), and long short-term memory (LSTM) models. They found that LSTM exhibited the highest predictive accuracy among models. Jiang (2021) performed a bibliometric analysis of research papers that used deep learning models for stock market prediction. The author identified that most studies focused on a single stock or market index, with machine-learning methods rarely applied to broader, multi-market contexts.

Lee *et al*. (2019) applied a Deep Q-network with a convolutional neural network function approximator to train their model on the US stock market and tested it across 31 countries over a 12-year period. Similarly, Pathak and Shetty (2019) used machine learning techniques for stock market prediction in India. Liu *et al*. (2022) applied deep learning models to the Chinese stock market and found that price trends based on daily closing prices have predictive power for future stock price movements. Awwad and Razia (2021) adopted Altman's Z-score model to predict the performance of the Palestinian industrial sector using multiple regression models. Tabash *et al*. (2025) stated that stock market volatility and uncertainty can be advantageous for long-term investors in making well-informed investment decisions.

The stock market has always been an important component of the economy and a central concern for many investors. However, it is difficult to grasp stock price changes due to their instability and stochastic behavior (Liu and Long, 2020). In earlier years, stock market analysis was purely based on economic factors, which made price predictions relatively stagnant. In today's market, mathematical models and fuzzy theory are the primary techniques utilized for stock price prediction (Liu and Long, 2020). Tabash *et al*. (2024a) further explored stock market behavior by employing forward exchange rate premiums during the COVID-19 period. Additionally, machine learning techniques such as artificial neural networks (ANN), decision trees (DT), and random forests (RF) have been used to predict stock prices. While the machine learning approach has demonstrated promising results, there is still room for improvement in terms of forecast accuracy. In addition, Bhutto *et al*. (2020) explored how international investors can benefit from portfolio diversification across the emerging BRICS economies and confirmed that diversification among BRICS nations is effective, especially in the long run. This supports global investment strategies that allocate funds across these emerging markets to minimize risk and maximize returns. Similarly, Ahmed *et al*. (2020) revealed that high accrual firms generally yield lower returns, while cash-based operating profit shows stronger predictive power for large firms. This suggests that accounting measures can be significant in explaining stock returns, particularly for large firms, but are less reliable for small firms. Furthermore, Tabash *et al*. (2024b) stated that macroeconomic fundamentals play a crucial role in driving proportional changes in stock market dynamics, especially in the post-COVID-19 period.

Deep learning, a subset of machine learning techniques, has gained popularity in recent years and has been applied in various domains such as speech recognition (Noda *et al*., 2015), real-time power prediction (Sun *et al*., 2021), fault diagnosis (Xu *et al*., 2021), medical sciences (Bhatt *et al*., 2021) and many others. However, there are relatively few applications of deep learning techniques in the prediction of stock prices. Rather *et al*. (2015) used a hybrid model and a recurrent neural network (RNN) to confirm the accuracy of stock returns prediction. Shah *et al*. (2022) employed multiple hybrid deep-learning approaches to predict stock prices, emphasizing ARIMA, LSTM, and CNN-LSTM methodologies. Sonkavde *et al*. (2023) examined various algorithms, including supervised and unsupervised machine learning techniques, for stock price prediction. Yoshihara *et al*. (2014) projected stocks listed on the Nikkei using RNN and identified challenges related to overfitting when applying deep learning models with limited data. The LSTM network is known to reduce overfitting and enhance both the accuracy and generalizability of predictions (Wang *et al*., 2023). The

Downloaded from http://www.emerald.com/jbsed/article-pdf/6/1/70/10049847/jbsed-05-2025-0134en.pdf by guest on 06 February 2026

effectiveness of LSTM networks for index forecasting warrants further exploration. Therefore, this paper utilizes hybrid deep learning models to achieve accurate prediction of market indices.

Other studies have focused on factors such as volatility specifications, cash flow-to-price ratio, market capitalization, and debt-equity ratio as significant determinants of momentum returns (Kumari *et al*., 2017). Ayadi and Paseda (2023) argued that market returns are what matter most to investors. In contrast, Neely *et al*. (2014) used technical indicators to forecast stock returns and found that volatility and trends were statistically significant in predicting future stock prices in the short term. In addition, Eiamkanitchat *et al*. (2017) implemented technical and fundamental analysis to select stocks and estimate their intrinsic values. Kim and Won (2018) integrated different GARCH-type models with LSTM to forecast stock price volatility. Their experimentation using data from the Korean Stock Exchange Index demonstrated that the hybrid GEW-LSTM model outperformed standalone models such as GARCH, ANN, and LSTM. Similarly, Liew and Mayster (2017) employed an ARMA-GARCH framework in conjunction with artificial neural networks to develop an intelligent system for predicting stock market shocks.

Summarizing the above references, the daily closing index prices of BRICS nations were predicted over different periods. LSTM and SARIMAX models are used to forecast in integrated steps, including stationarity testing and estimation of market index movements. These models help determine whether the projected values align with actual stock prices.

4. Methodology

4.1 Research design

This study employs a quantitative, comparative research design to forecast the stock market performance of BRICS nations (Brazil, Russia, India, China, and South Africa) using two distinct forecasting models: Long Short-Term Memory (LSTM) neural networks and Seasonal Autoregressive Integrated Moving Average with Exogenous Variables (SARIMAX). The models are applied across all five markets for the period from January 2010 to November 2023. The primary aim is to compare the predictive performance of modern machine learning models against traditional time series forecasting methods.

Furthermore, it is important to apply model validation and performance testing to both the LSTM and SARIMAX models, which have been largely absent in previous studies. Therefore, this study seeks to forecast the stock market performance of BRICS nations by incorporating dynamic machine learning models alongside established statistical models.

4.2 Data collection method

Daily stock index data for each BRICS country were collected from trusted online sources, namely Investing.com and Yahoo Finance. To achieve the objectives of the study, daily data for the period from January 2010 to November 2023 were collected from the Brazil Stock Exchange Index (IBOVESPA), Moscow Exchange (MOEX), National Stock Exchange of India (NSE), Shanghai Stock Exchange (SSE), and Johannesburg Stock Exchange (JSE). It was observed that the data exhibited high return volatility, particularly due to the lingering effects of the 2008–2009 financial crisis. BRICS economies were significantly affected in the post-crisis period, particularly in terms of market efficiency in pricing stocks and shifts in investor sentiment.

4.3 Data analysis techniques

The methodology involves the following steps:

(1) *Stationarity Testing:* The Augmented Dickey-Fuller (ADF) test is applied to determine whether the time series data are stationary.

Downloaded from http://www.emerald.com/jbsed/article-pdf/6/1/70/10049847/jbsed-05-2025-0134en.pdf by guest on 06 February 2026

(2) *Model Implementation:*

- *The SARIMAX* model is used to capture seasonal patterns and exogenous economic influences.
- *The LSTM* model is trained on past stock index values to support long-term sequence learning.

(3) *Model Validation and Testing:* Forecasting is conducted for a 365-day horizon, and model outputs are evaluated against actual market prices.

(4) *Performance Comparison:* The models' predictive accuracy is assessed using RMSE, MAE, and MAPE across all five BRICS countries.

4.4 Machine learning models

4.4.1 LSTM (long short-term memory) model. An artificial neural network (ANN) known as LSTM is highly effective for processing data with long-term dependencies. The output in LSTM depends on information collected from previous time steps, using memory cells regulated by an input gate, an output gate, and a forget gate (Yu *et al.*, 2019). LSTM is a specialized form of recurrent neural network (RNN) designed to address the vanishing gradient problem and mitigate long-term dependency issues. It was first introduced by (Hochreiter and Schmidhuber, 1997). The LSTM model employs a gated mechanism to regulate and update the state of memory cells, enabling selective information retention and filtering. This structure comprises input, forget, and output gates, each responsible for specific aspects of information control. Each memory cell typically includes three sigmoid activation layers and one tanh activation layer. Figure 3 illustrates the architecture of an LSTM memory cell.

In the LSTM unit, the forget gate determines which information in the cell state should be discarded. As illustrated in Figure 3, the memory cell takes as inputs the output $ht-1$ from the previous time step and the external input xt from the current time step. These inputs are concatenated into a single vector $ht-1$, xt, and passed through a sigmoid function σ to compute the gate outputs.

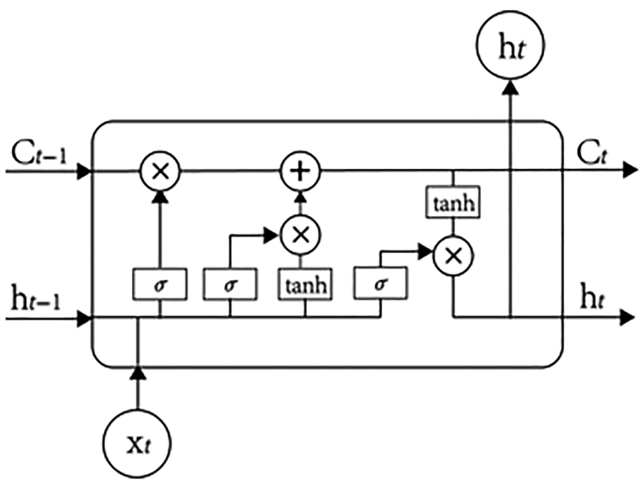

Figure 3. LSTM memory cell structure. **Source:** https://doi.org/10.1371/journal.pone.0227222

Downloaded from http://www.emerald.com/jbsed/article-pdf/6/1/70/10049847/jbsed-05-2025-0134en.pdf by guest on 06 February 2026

4.4.2 SARIMAX (seasonal Autoregressive Moving Average) model. SARIMAX, an acronym for Seasonal Autoregressive Integrated Moving Average with Exogenous Factors, serves as a robust method for time series forecasting. It extends the traditional ARIMA model by incorporating exogenous variables (X)—external factors that may influence the target time series.

The seasonal component (S) accounts for recurring patterns in the data, such as daily, weekly, monthly, or annual cycles. The autoregressive component (AR) captures the interdependence between the current observation and its previous values, reflecting a linear relationship over time. The integrated component (I) ensures stationarity by performing differencing operations, ensuring that statistical properties remain constant over time. The moving average component (MA) models the relationship between current observations and past forecast errors, capturing short-term fluctuations. A key advantage of SARIMAX is its ability to incorporate exogenous variables (X), making it suitable for forecasting problems influenced by external economic, political, or structural factors.

In summary, SARIMAX provides a comprehensive and flexible framework for time series forecasting, particularly effective for datasets exhibiting seasonal patterns and external dependencies. However, its effectiveness depends on careful parameter selection and rigorous model validation to ensure forecast accuracy and reliability.

4.5 Performance metrics evaluation

Three main performance metrics are used in this study to assess the predictive accuracy of the forecasting models: Mean Absolute Percentage Error (MAPE), Mean Absolute Error (MAE), and Root Mean Square Error (RMSE).

4.5.1 Mean Absolute Percentage Error. The Mean Absolute Percentage Error (MAPE) is a common metric for assessing forecast accuracy, particularly in time series analysis. It measures the average absolute percentage difference between actual and forecasted values (Patel *et al.*, 2015).

The MAPE is calculated using the following formula:

$$MAPE = \frac{1}{n} \sum_{t=1}^{n} |At - Ft| \, x \, 100$$

Where;

(1) *At* denotes the actual value at time t,

(2) *Ft* denotes the forecasted value at time t,

(3) *n* is the total number of observations.

Interpreting MAPE involves understanding the percentage error between actual and forecasted values for each observation. A lower MAPE indicates higher forecast accuracy, while a higher MAPE indicates lower accuracy. However, MAPE has some limitations: it is sensitive to extreme values, cannot handle zero or near-zero actual values, and treats overestimates and underestimates equally, which may not be ideal in all contexts. Despite these drawbacks, MAPE remains a commonly used metric across various industries.

4.5.2 Mean absolute error (MAE). The Mean Absolute Error (MAE) is a fundamental metric used to assess forecasting accuracy. It measures the average of the absolute differences between predicted and actual values. The formula for MAE is as follows:

$$MAE = \frac{1}{n} \sum_{i=1}^{n} (yi - y\hat{}i)$$

Here:

Downloaded from http://www.emerald.com/jbsed/article-pdf/6/1/70/10049847/jbsed-05-2025-0134en.pdf by guest on 06 February 2026

(1) n represents the total number of observations

(2) y denotes the actual value

(3) $y\hat{}i$ symbolizes the predicted value of the observation at time i.

The calculation involves squaring the difference between each predicted value ($y\hat{}i$) and its corresponding actual value (yi), followed by averaging these squared differences across all observations. MAE reflects the average magnitude of errors in a set of predictions, without considering their direction. A lower MAE indicates better model performance, indicating that predicted values closely match actual values on average.

4.5.3 Root Mean Square Error (RMSE). The RMSE measures the square root of the average of the squared differences between actual and predicted values. RMSE penalizes larger errors more significantly than MAE due to the squaring of residuals. The formula for RMSE is given by:

$$RMSE = \frac{1}{n} \sum_{i=1}^{n} (yi - y\hat{}i)^2$$

5. Empirical results

Table 2 provides the descriptive statistics, summarizing the key characteristics of the dataset. The mean value represents the central tendency, indicating the typical value of the distribution.

As shown in Table 2, a high mean value of 77,201 is reported for Brazil, followed by South Africa with an average stock price of 55,724 during the sample period. The lowest average stock price is observed in Russia, with a mean value of 2,708. Similarly, a higher standard deviation indicates the values are spread over a wider range, which is evident in the Brazilian and South African markets. Skewness and kurtosis measure the asymmetry and tailedness of the distribution, respectively. A positive kurtosis suggests heavier tails than a normal distribution, while a negative kurtosis suggests lighter tails. The value of kurtosis near zero indicates a normal distribution. In this dataset, the values of skewness and kurtosis were close to zero, providing insights into the distributional properties and overall characteristics of the data.

5.1 Unit root test for stationarity checks

A unit root in a time series variable indicates non-stationarity, where statistical properties such as the mean and variance fluctuate over time. The presence of a unit root suggests potential

Table 2. Descriptive statistics

	Brazil	Russia	India	China	South Africa
Mean	77201.1	2708.0	10221.5	2932.5	55724.7
Maximum	130776	4287.5	21980.8	5166.3	80791.3
Minimum	37497	1237.4	4584.2	1950.0	32887.4
St. deviation	24744.1	712.9	4584.9	507.7	11312.2
25% percentile	56187.7	1755.3	6029.4	2575.9	49821.1
50% percentile	67748.5	2244.1	8822.47	3001.7	54079.4
75% percentile	102118.0	2800.3	12039.07	3263.3	63955.3
Skewness	0.465	0.593	0.789	0.176	0.198
Kurtosis	−1.22	−0.37	−0.49	0.710	−0454

Source(s): Compiled by authors

Downloaded from http://www.emerald.com/jbsed/article-pdf/6/1/70/10049847/jbsed-05-2025-0134en.pdf by guest on 06 February 2026

random fluctuations and persistent trends, which can complicate accurate modeling and forecasting. To assess stationarity, the test statistic is compared against critical values at predefined significance levels (commonly 5%) to determine whether to reject the null hypothesis of a unit root.

The augmented Dickey-Fuller (ADF) test is a widely used method for examining the presence of a unit root in a time series. It operates on the first difference of the time series variable (Δyt), aiming to transform the data into a stationary form. The general ADF test equation is:

$$\Delta yt = \alpha + \beta t + \gamma yt - 1 + \delta 1 \Delta yt - 1 + \delta 2 \Delta yt - 2 + \ldots + \delta p \Delta yt - p + \epsilon t$$

α denotes a constant term.

(1) β denotes a linear time trend,

(2) γ denotes the coefficient of the lagged level variable ($yt-1$),

(3) δi denotes the coefficients of the lagged differenced variables ($\Delta yt-i$),

(4) p is the lag length determined via statistical criteria like AIC or BIC,

(5) ϵt represents the error term assumed to be white noise

The ADF test was employed in this study to assess the presence of a unit root in a time series dataset. The null hypothesis posits the existence of a unit root (i.e. non-stationarity), while the alternative hypothesis implies stationarity. As shown in Table 3, the ADF test statistics were negative for Brazil, Russia, China, and South Africa. More negative test statistics provide stronger evidence against the presence of a unit root. For India, the test statistic had a larger absolute value, further supporting rejection of the null hypothesis. Furthermore, the critical values and p-values across the dataset were small, indicating strong evidence in favor of stationarity and against the null hypothesis of a unit root.

5.2 SARIMAX results

The SARIMAX results incorporated the autoregressive (AR) and moving average (MA) components to investigate the relationship between time series observations at different time lags and the correlation among residual errors, respectively. To evaluate model adequacy, several diagnostic tests were performed: the Ljung-Box test assessed residual autocorrelation, normality tests (Jarque-Bera) evaluated whether the residuals followed a normal distribution,

Table 3. Unit root test for stationarity check

	ADF test for stationarity checks
NSE	0.420
ΔNSE	0.00***
IBOVESPA	−0.8919
ΔIBOVESPA	0.00***
MOEX	−1.176
ΔMOEX	0.00***
SSE Composite	−2.453
ΔSSE Composite	0.000***
JSE	−1.3
ΔJSE	0.000***

Note(s): *** indicates a significant level at 0.001

Source(s): Compiled by authors

Downloaded from http://www.emerald.com/jbsed/article-pdf/6/1/70/10049847/jbsed-05-2025-0134en.pdf by guest on 06 February 2026

and a heteroskedasticity test examined whether residual variance varied over time. The diagnostic results, as shown in Table 4, confirm that the residuals do not exhibit autocorrelation and that the model is well specified. This aligns with (Hansen and Lunde, 2014), who note that time series with minimal autocorrelation tend to produce weak lagged instruments.

The magnitude of the ar.L1 and ar.L2 coefficients indicates the strength of the relationship between consecutive observations. The negative autoregressive values at lag 1 and lag 2 suggest an inverse relationship between consecutive observations. Similarly, the ma.L1 and ma.L2 coefficients represent the moving average components at lag 1 and lag 2, respectively. The coefficients were positive, suggesting a direct relationship between past forecast errors and current observations. This dynamic is valuable for forecasting and understanding the dynamics of the data.

The performance of different models in stock forecasting for BRICS nations is illustrated in Figure 4. The evaluation of these models was conducted using RMSE and MSE scores. The analysis presented in Table 5 reveals that the ensemble algorithm exhibits superior performance compared to other individual algorithm models. This analysis highlights the critical role of precise coding during both the training and testing phases of stock forecasting. Accurate implementation is essential, as it can significantly enhance the performance of machine learning models. However, it is important to note that the effectiveness of these models depends heavily on the selection of appropriate performance metrics.

In the forecasting approach, the data were divided into two parts: (1) the training set, used to train the model and update its parameters; and (2) the test set, used to optimize the model for 12-month forecasts. As of November 2023, the market price of Brazil's stock index was 119,177. The SARIMAX model indicated a sharp decline to 103,676, representing a 14.9% negative return. In contrast, the LSTM model forecasted a target price of 119,900, indicating a 0.6% upside compared to the current price. For the Russia Stock Exchange (MOEX), the SARIMAX model predicted a target price of 2,524, implying a 22% decline, while the LSTM model forecasted 2,700, corresponding to a 16.7% decline. The Indian Stock Exchange (NSE) was trading at 19,444.85 on 11 November 2023. SARIMAX forecasted a decline to 18,900 (−2.8% decline), whereas the LSTM model predicted a modest increase to 19,900 (+2.3%). For the Chinese Stock Exchange (SSE Composite), SARIMAX predicted a flat forecast of 3,189, whereas the LSTM model predicted a decline to 3050 (−4.5%). Finally, for the South African Stock Exchange (JSE), SARIMAX indicated a sharp decline of 8.5%, while the LSTM predicted an increase in the index to 73,500, representing a 1.4% gain.

Table 4. SARIMAX results for the BRICS nations

	Brazil	Russia	India	China	South Africa
No of observations	3,082	3,121	3,331	3,366	3,458
ar.L1	−1.1206***	−0.0811	−0.5612***	0.2316	−0.8886
ar.L2	−0.7032***	0.0447	−0.9394***	−0.9626	−0.7871
ma.L1	1.0623***	−0.0143	0.5860***	−0.1747	0.9136
ma.L2	0.6777***	0.0441	0.9596***	0.9138	0.8432
AIC	52185.439	30942.395	40502.173	30958.829	47866.469
Ljung-Box (L1) (Q)	2.98	0.00	0.01	0.00	0.40
Jarque-Bera (JB)	26886.43***	7739536.59***	17314.99***	11022.82***	5077.06***
Heteroskedasticity (H)	3.94	6.74	6.65	1.42	4.84
Skew	−1.16	−8.50	−0.84	−1.18	−0.44
Kurtosis	17.28	246.41	14.05	12.07	9.20

Note(s): *** indicates a significant level at 0.001

Source(s): Compiled by authors

Downloaded from http://www.emerald.com/jbsed/article-pdf/6/1/70/10049847/jbsed-05-2025-0134en.pdf by guest on 06 February 2026

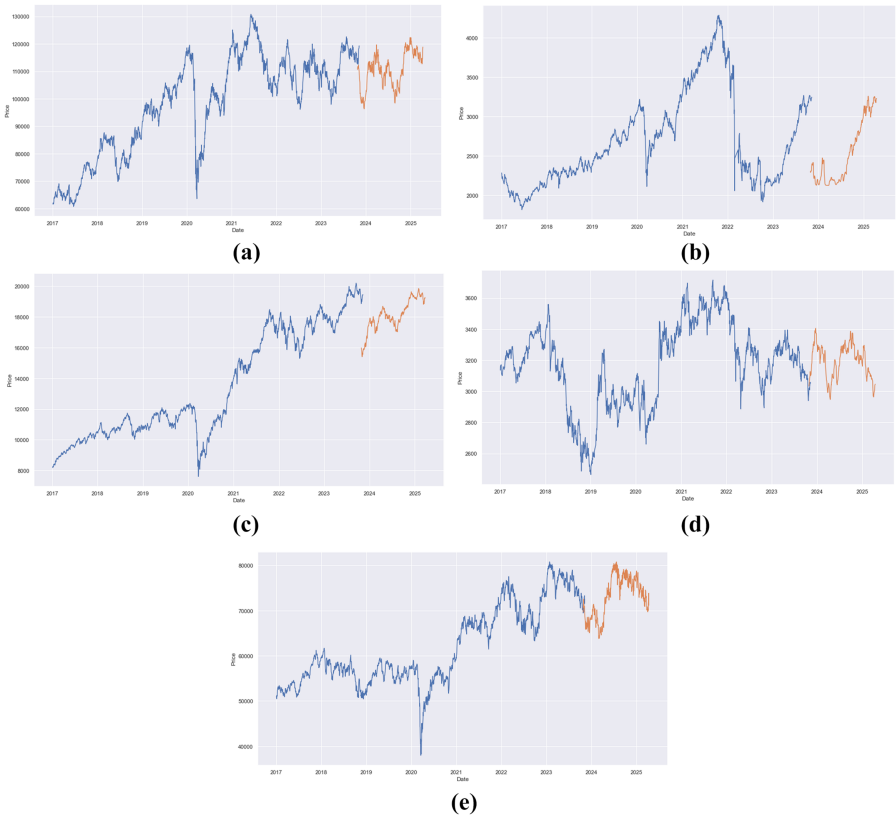

Figure 4. Forecasting for 365 days using the LSTM model for the BRICS nations. Note: (a) Price prediction chart for IBOVESTA using LSTM; (b) Price prediction chart for MOEX using LSTM; (c) Price prediction chart for NSE using LSTM; (d) Price prediction chart for SSE composite using LSTM; (e) Price prediction chart for JSE using LSTM. **Source:** Compiled by authors

Table 5. Index price prediction for 365 days using machine learning models

Countries	Current market price as of 11th November 2023	SARIMAX – returns	LSTM and returns
Brazil (IBOVESTA)	119,177	103,676 (−14.9%)	119,900 (0.6%)
Russia (MOEX)	3242.45	2524.00 (−22%)	2,700 (−16.7%)
India (NSE)	19444.85	18,900 (−2.8%)	19,900 (2.3%)
China (SSE Composite)	3196	3,189 (0.000)	3,050 (−4.5%)
South Africa (JSE)	72465	66,277 (−8.5%)	73,500 (1.4%)

Note(s): IBOVESTA currency in Brazilian Real; MOEX currency in Russian Ruble; NSE currency in Rupees; SSE Composite currency in Yuan; JSE currency in South African Rand

Source(s): Compiled by authors

Table 6 presents the performance metrics used to evaluate the accuracy of the forecasting models across the BRICS countries. These metrics —Root Mean Square Error (RMSE), Mean Absolute Error (MAE), and Mean Absolute Percentage Error (MAPE)—measure the magnitude of errors between predicted and actual values (Chai and Draxler, 2014). A lower

Downloaded from http://www.emerald.com/jbsed/article-pdf/6/1/70/10049847/jbsed-05-2025-0134en.pdf by guest on 06 February 2026

Table 6. Performance metrics measurement for forecast accuracy

Forecasting countries	RMSE	MAE	MAPE
Brazil (IBOVESTA)	0.1101	0.1201	07.46
Russia (MOEX)	0.153	0.180	12.63
India (NSE)	0.0631	0.0713	03.20
China (SSE Composite)	0.029	0.035	02.72
South Africa (JSE)	0.1498	0.1711	10.20

Source(s): Compiled by authors

RMSE value indicates better model performance and higher predictive accuracy. Furthermore, across all countries, the RMSE values were relatively low, particularly for India and China, confirming the effectiveness of the LSTM model in these markets.

The second performance metric, Mean Absolute Error (MAE), does not square the residuals, which makes it less sensitive to large errors compared to RMSE. The MAE values indicated strong agreement between forecasted and actual values, reflecting good overall forecasting accuracy. In particular, the MAE values for India and China were the lowest among the BRICS countries, suggesting higher predictive accuracy in these markets. While Brazil, Russia, and South Africa exhibited higher MAE values, their results were still within an acceptable error range. Similarly, the Mean Absolute Percentage Error (MAPE) was used to assess the models' accuracy. The MAPE values for India (3.2%) and China (2.72%) were the lowest among the BRICS nations, indicating superior forecasting accuracy compared to Brazil (7.46%), Russia (12.63%), and South Africa (10.2%).

6. Discussion of results

The empirical results from this study provide key insights into the effectiveness of traditional versus modern forecasting models applied across BRICS stock markets. The findings are broadly consistent with recent literature, reinforcing the emerging consensus that deep learning models —particularly LSTM — exhibit superior forecasting performance compared to conventional time series models in complex and dynamic financial environments.

6.1 Model performance comparison

Across all five BRICS countries, the LSTM model demonstrated stronger predictive performance than SARIMAX, particularly in markets characterized by higher data continuity and lower noise levels. This supports the results of Sonkavde *et al*. (2023), who found that deep learning techniques — especially LSTM — offer more reliable performance in capturing complex and nonlinear market patterns in developing markets. Similar conclusions were drawn by Nabipour *et al*. (2020), who reported that LSTM outperformed models such as ARIMA, Random Forest, and SVM when tested on historical stock market data.

In this study, LSTM consistently reported lower prediction errors—as measured by RMSE, MAE, and MAPE —especially for the Indian and Chinese markets. These results align with previous findings from Liu *et al*. (2022) and Chen *et al*. (2024), where LSTM achieved high accuracy in these countries due to their more structured financial systems and well-maintained historical data. Conversely, the SARIMAX model underperformed in environments marked by instability and high volatility, such as in Brazil and Russia. This observation reflects the limitations identified by Kim and Won (2018), who emphasized that traditional time series models often struggle to adapt to abrupt market disruptions or nonlinear dynamics.

6.2 Market-specific observations

Among all five BRICS countries, India emerged as the most predictable and stable market, based on the performance of the LSTM model, which estimated a modest price increase with

Downloaded from http://www.emerald.com/jbsed/article-pdf/6/1/70/10049847/jbsed-05-2025-0134en.pdf by guest on 06 February 2026

minimal forecasting error (MAPE of 3.2%). This finding is consistent with Pathak and Shetty (2019), who demonstrated that the Indian stock market responds well to machine learning techniques due to its stable macroeconomic growth trajectory. In the case of the Chinese stock market, although the LSTM model predicted a slight decline, it still exhibited the lowest error margins overall, suggesting high predictive reliability. This outcome aligns with Chen *et al.* (2024), who found that the LSTM model maintained strong forecasting accuracy for Chinese markets, even under government policy interventions and trade-related frictions. Brazil and South Africa showed moderate forecasting accuracy, consistent with the findings of Carosia *et al.* (2024) and Naeem *et al.* (2024). These studies highlighted how political instability, resource dependency, and commodity price volatility complicate stock market forecasting in these economies. As expected, Russia exhibited the highest forecasting error and the most substantial negative return projections across both models. This outcome reflects the ongoing geopolitical and economic uncertainty, as discussed by Cevik *et al.* (2022) and Kamin and Langhammer (2024).

6.3 Practical implications

The outcomes of this study suggest that investors seeking data-driven forecasting in emerging markets should prioritize countries like India and China, where the LSTM demonstrates high predictive reliability. For policymakers, the findings reinforce the importance of enhancing data transparency and regulatory stability to make financial markets more investor-friendly and predictable.

Bhutto *et al.* (2020) emphasized the benefits of portfolio diversification across BRICS markets as a strategy to reduce investment risk. This study extends that insight by demonstrating that the use of reliable forecasting tools like the LSTM model can further enhance portfolio performance. Similarly, Ahmed *et al.* (2020) highlighted the role of quantitative indicators and predictive models in improving investment selection — a theme supported by our empirical findings.

6.4 Theoretical contributions

The comparative results presented here support the growing body of evidence suggesting that neural networks are particularly well-suited for forecasting in complex financial systems, especially when market conditions are influenced by both macroeconomic factors and investor behavior. This finding is consistent with prior reviews such as Jiang (2021) and Nkiou *et al.* (2019), which concluded that deep learning methods are more adaptable and effective than traditional statistical models. Finally, emerging research from Shah *et al.* (2022) and Kim and Won (2018) advocates for the integration of hybrid models that combine neural networks with traditional econometric approaches to enhance forecasting accuracy. This suggests a valuable future direction for improving stock market prediction in volatile or structurally diverse economies, such as those within the BRICS bloc.

7. Conclusions

This study provides a comparative analysis of stock market behavior across BRICS nations, using LSTM and SARIMAX forecasting models applied to over a decade of daily stock market index data. The findings underscore the superior predictive performance of the LSTM, particularly in markets characterized by more stable economic structures, such as China and India.

Beyond numerical performance, the study illustrates a broader transformation in financial forecasting practices. The limitations of conventional models like SARIMAX—especially under conditions of high volatility —highlight the growing need for flexible, nonlinear forecasting tools such as LSTM. These models are better equipped to adapt to the complex and dynamic nature of modern financial markets. This shift carries significant implications for

Downloaded from http://www.emerald.com/jbsed/article-pdf/6/1/70/10049847/jbsed-05-2025-0134en.pdf by guest on 06 February 2026

countries with greater market transparency and consistent data patterns, positioning them as more attractive destinations for international capital through improved predictability.

For investors, adopting deep learning tools is becoming increasingly essential for navigating uncertainty, managing portfolio risk, and identifying opportunities across emerging markets. The predictive advantage demonstrated by LSTM highlights its relevance not only as a technical solution but as a critical component of contemporary investment strategies.

Looking ahead, future studies could enhance forecasting accuracy by incorporating macroeconomic indicators, investor sentiment, or news analytics into machine learning frameworks. Additionally, exploring hybrid models that integrate deep learning with traditional time series approaches may yield even more robust and adaptive predictions. Extending this analysis to other emerging regions or comparing BRICS with developed market counterparts could further enrich our understanding of global financial dynamics.

In summary, this study contributes not only to improved forecasting accuracy but also to a broader understanding of how artificial intelligence can transform decision-making in complex and uncertain environments.

Data availability

Data is collected from investing.com and Yahoo Finance. Data codes will be available upon request.

Acknowledgments

The authors would like to express their sincere gratitude to the anonymous reviewers for their invaluable support in enriching the quality of this manuscript. The authors are also grateful for the journal's commitment to advancing knowledge in the field of finance and economics.

References

Agarwal, M., Azim, R. and Kumar, S. (2022), "BRICS: the 2008 financial crisis and economic performance", *BRICS Journal of Economics*, Vol. 3 No. 2, pp. 21-49, doi: 10.3897/brics-econ.3.e86488.

Ahmed, R.R., Kalugina, O. and Havrysh, V. (2020), "Identifying investment strategies using accounting information from stock market", *Transformations in Business and Economics*, Vol. 19 No. 3, p. 51.

Akaike, H. (1969), "Fitting autoregreesive models for prediction", in *Selected Papers of Hirotugu Akaike*, Springer, pp. 131-135, doi: 10.1007/978-1-4612-1694-0_10.

Akhtar, M.M., Zamani, A.S., Khan, S., Shatat, A.S.A., Dilshad, S. and Samdani, F. (2022), "Stock market prediction based on statistical data using machine learning algorithms", *Journal of King Saud University Science*, Vol. 34 No. 4, 101940, doi: 10.1016/j.jksus.2022.101940.

Awwad, B. and Razia, B. (2021), "Adapting Altman's model to predict the performance of the Palestinian industrial sector", *Journal of Business and Socio-economic Development*, Vol. 1 No. 2, pp. 149-164, doi: 10.1108/JBSED-05-2021-0063.

Ayadi, O.F. and Paseda, O.A. (2023), "The causal relationship between coefficient of elasticity of trading and market return in an African emerging market", *Journal of Business and Socio-Economic Development*, Vol. 3 No. 2, pp. 166-179, doi: 10.1108/JBSED-12-2021-0174.

Bhatt, C., Kumar, I., Vijayakumar, V., Singh, K.U. and Kumar, A. (2021), "The state of the art of deep learning models in medical science and their challenges", *Multimedia Systems*, Vol. 27 No. 4, pp. 599-613, doi: 10.1007/s00530-020-00694-1.

Bhutto, S.A., Ahmed, R.R., Streimikiene, D., Shaikh, S. and Streimikis, J. (2020), "Portfolio investment diversification at global stock market: a cointegration analysis of emerging BRICS (P) group", *Acta Montanistica Slovaca*, Vol. 25 No. 1, pp. 57-69, doi: 10.46544/AMS.v25i1.6.

Downloaded from http://www.emerald.com/jbsed/article-pdf/6/1/70/10049847/jbsed-05-2025-0134en.pdf by guest on 06 February 2026

Carosia, A. E.d. O., da Silva, A.E.A. and Coelho, G.P. (2024), "Predicting the Brazilian stock market with sentiment analysis, technical indicators and stock prices: a deep learning approach", *Computational Economics*, Vol. 65 No. 4, pp. 1-28, doi: 10.1007/s10614-024-10636-y.

Carp, L. (2012), "Can stock market development boost economic growth? Empirical evidence from emerging markets in Central and Eastern Europe", *Procedia Economics and Finance*, Vol. 3, pp. 438-444, doi: 10.1016/S2212-5671(12)00177-3.

Cevik, E., Kirci Altinkeski, B., Cevik, E.I. and Dibooglu, S. (2022), "Investor sentiments and stock markets during the COVID-19 pandemic", *Financial Innovation*, Vol. 8 No. 1, p. 69, doi: 10.1186/s40854-022-00375-0.

Chai, T. and Draxler, R.R. (2014), "Root mean square error (RMSE) or mean absolute error (MAE)", *Geoscientific Model Development Discussions*, Vol. 7 No. 1, pp. 1525-1534, doi: 10.5194/gmd-7-1247-2014.

Challa, M.L., Malepati, V. and Kolusu, S.N.R. (2020), "S&P BSE Sensex and S&P BSE IT return forecasting using ARIMA", *Financial Innovation*, Vol. 6 No. 1, pp. 1-19, doi: 10.1186/s40854-020-00201-5.

Chen, K., Zhou, Y. and Dai, F. (2015), "A LSTM-based method for stock returns prediction: a case study of China stock market", *2015 IEEE International Conference on Big Data (Big Data)*, pp. 2823-2824, doi: 10.1109/BigData.2015.7364089.

Chen, W., Chen, B. and Cai, X. (2024), "Forecasting China's stock market risk under the background of the Stock Connect programs", *Soft Computing*, Vol. 28 No. 3, pp. 2483-2499, doi: 10.1007/s00500-023-08496-z.

Eiamkanitchat, N., Moontuy, T. and Ramingwong, S. (2017), "Fundamental analysis and technical analysis integrated system for stock filtration", *Cluster Computing*, Vol. 20 No. 1, pp. 883-894, doi: 10.1007/s10586-016-0694-2.

Fama, E.F. (1970), "Efficient capital markets: a review of theory and empirical work", *The Journal of Finance*, Vol. 25 No. 2, pp. 383-417, doi: 10.2307/2325486.

Fischer, T. and Krauss, C. (2018), "Deep learning with long short-term memory networks for financial market predictions", *European Journal of Operational Research*, Vol. 270 No. 2, pp. 654-669, doi: 10.1016/j.ejor.2017.11.054.

Groda, B. and Vrbka, J. (2017), "Prediction of stock price developments using the Box-Jenkins method", *SHS Web of Conferences, Strategic Partnerships in International Trade*, Vol. 39, pp. 1-8, doi: 10.1051/shsconf/20173901007.

Hansen, P.R. and Lunde, A. (2014), "Estimating the persistence and the autocorrelation function of a time series that is measured with error", *Econometric Theory*, Vol. 30 No. 1, pp. 60-93, doi: 10.1017/S0266466613000121.

Hochreiter, S. and Schmidhuber, J. (1997), "Long short-term memory", *Neural Computation*, Vol. 9 No. 8, pp. 1735-1780, doi: 10.1162/neco.1997.9.8.1735.

Insaidoo, M., Arthur, L., Amoako, S. and Andoh, F.K. (2021), "Stock market performance and COVID-19 pandemic: evidence from a developing economy", *Journal of Chinese Economics and Foreign Trade Studies*, Vol. 14 No. 1, pp. 60-73, doi: 10.1108/JCEFTS-08-2020-0055.

Jiang, W. (2021), "Applications of deep learning in stock market prediction: recent progress", *Expert Systems with Applications*, Vol. 184, 115537, doi: 10.1016/j.eswa.2021.115537.

Jiang, H., Xu, Y. and Liu, C. (2013), "Construction price prediction using vector error correction models", *Journal of Construction Engineering and Management*, Vol. 139 No. 11, 04013022, doi: 10.1061/(ASCE)CO.1943-7862.0000729.

Jin, B. and Xu, X. (2024), "Machine learning predictions of regional steel price indices for East China", *Ironmaking and Steelmaking*. doi: 10.1177/03019233241254891.

Kamin, K. and Langhammer, R.J. (2024), "From BRICS to BRICS+: sheer more members is not a challenge to G7", *The Economists' Voice*, Vol. 20 No. 2, pp. 259-265, doi: 10.1515/ev-2023-0065.

Downloaded from http://www.emerald.com/jbsed/article-pdf/6/1/70/10049847/jbsed-05-2025-0134en.pdf by guest on 06 February 2026

Kim, H.Y. and Won, C.H. (2018), "Forecasting the volatility of stock price index: a hybrid model integrating LSTM with multiple GARCH-type models", *Expert Systems with Applications*, Vol. 103, pp. 25-37, doi: 10.1016/j.eswa.2018.03.002.

Kumari, J., Mahakud, J. and Hiremath, G.S. (2017), "Determinants of idiosyncratic volatility: evidence from the Indian stock market", *Research in International Business and Finance*, Vol. 41, pp. 172-184, doi: 10.1016/j.ribaf.2017.04.022.

Lee, J., Kim, R., Koh, Y. and Kang, J. (2019), "Global stock market prediction based on stock chart images using deep Q-network", *IEEE Access*, Vol. 7, pp. 167260-167277, doi: 10.1109/ACCESS.2019.2953542.

Liew, J. K.-S. and Mayster, B. (2017), "Forecasting ETFs with machine learning algorithms", *Journal of Alternative Investments*, Vol. 20 No. 3, pp. 58-78, doi: 10.3905/jai.2017.2017.1.058.

Liu, H. and Long, Z. (2020), "An improved deep learning model for predicting stock market price time series", *Digital Signal Processing*, Vol. 102, 102741, doi: 10.1016/j.dsp.2020.102741.

Liu, X. and Sinclair, P. (2008), "Does the linkage between stock market performance and economic growth vary across Greater China?", *Applied Economics Letters*, Vol. 15 No. 7, pp. 505-508, doi: 10.1080/13504850500426277.

Liu, Q., Tao, Z., Tse, Y. and Wang, C. (2022), "Stock market prediction with deep learning: the case of China", *Finance Research Letters*, Vol. 46, 102209, doi: 10.1016/j.frl.2021.102209.

Marques, L.M., Fuinhas, J.A. and Marques, A.C. (2013), "Does the stock market cause economic growth? Portuguese evidence of economic regime change", *Economic Modelling*, Vol. 32, pp. 316-324, doi: 10.1016/j.econmod.2013.02.015.

Nabipour, M., Nayyeri, P., Jabani, H., Mosavi, A., Salwana, E. and S, S. (2020), "Deep learning for stock market prediction", *Entropy*, Vol. 22 No. 8, p. 840, doi: 10.3390/e22080840.

Naeem, M., Jassim, H.S. and Korsah, D. (2024), "The application of machine learning techniques to predict stock market crises in Africa", *Journal of Risk and Financial Management*, Vol. 17 No. 12, p. 554, doi: 10.3390/jrfm17120554.

Neely, C.J., Rapach, D.E., Tu, J. and Zhou, G. (2014), "Forecasting the equity risk premium: the role of technical indicators", *Management Science*, Vol. 60 No. 7, pp. 1772-1791, doi: 10.1287/mnsc.2013.1838.

Ngwakwe, C.C. (2020), "Effect of COVID-19 pandemic on global stock market values: a differential analysis", *Acta Universitatis Danubius - Œconomica*, Vol. 16 No. 2, pp. 255-269.

Nikou, M., Mansourfar, G. and Bagherzadeh, J. (2019), "Stock price prediction using DEEP learning algorithm and its comparison with machine learning algorithms", *Intelligent Systems in Accounting, Finance and Management*, Vol. 26 No. 4, pp. 164-174, doi: 10.1002/isaf.1459.

Noda, K., Yamaguchi, Y., Nakadai, K., Okuno, H.G. and Ogata, T. (2015), "Audio-visual speech recognition using deep learning", *Applied Intelligence*, Vol. 42 No. 4, pp. 722-737, doi: 10.1007/s10489-014-0629-7.

Panigrahi, S. (2023), "Are cryptocurrencies a threat to financial stability and economic growth of India? Evidence from the cointegration approach", *Investment Management and Financial Innovations*, (June 29, 2023), Vol. 20 No. 2, pp. 307-320, doi: 10.21511/imfi.20(2).2023.26.

Patel, J., Shah, S., Thakkar, P. and Kotecha, K. (2015), "Predicting stock and stock price index movement using trend deterministic data preparation and machine learning techniques", *Expert Systems with Applications*, Vol. 42 No. 1, pp. 259-268, doi: 10.1016/j.eswa.2014.07.040.

Pathak, A. and Shetty, N.P. (2019), "Indian stock market prediction using machine learning and sentiment analysis", *Computational Intelligence in Data Mining: Proceedings of the International Conference on CIDM 2017*, pp. 595-603, doi: 10.1007/978-981-10-8055-5_53.

Pham, H.T. and Yang, B.-S. (2010), "Estimation and forecasting of machine health condition using ARMA/GARCH model", *Mechanical Systems and Signal Processing*, Vol. 24 No. 2, pp. 546-558, doi: 10.1016/j.ymssp.2009.08.004.

Downloaded from http://www.emerald.com/jbsed/article-pdf/6/1/70/10049847/jbsed-05-2025-0134en.pdf by guest on 06 February 2026

Rather, A.M., Agarwal, A. and Sastry, V. (2015), "Recurrent neural network and a hybrid model for prediction of stock returns", *Expert Systems with Applications*, Vol. 42 No. 6, pp. 3234-3241, doi: 10.1016/j.eswa.2014.12.003.

Shah, J., Vaidya, D. and Shah, M. (2022), "A comprehensive review on multiple hybrid deep learning approaches for stock prediction", *Intelligent Systems with Applications*, Vol. 16, 200111, doi: 10.1016/j.iswa.2022.200111.

Sonkavde, G., Dharrao, D.S., Bongale, A.M., Deokate, S.T., Doreswamy, D. and Bhat, S.K. (2023), "Forecasting stock market prices using machine learning and deep learning models: a systematic review, performance analysis and discussion of implications", *International Journal of Financial Studies*, Vol. 11 No. 3, p. 94, doi: 10.3390/ijfs11030094.

Sun, L., Liu, T., Xie, Y., Zhang, D. and Xia, X. (2021), "Real-time power prediction approach for turbine using deep learning techniques", *Energy*, Vol. 233, 121130, doi: 10.1016/j.energy.2021.121130.

Tabash, M.I., Ahmed, A., Issa, S.S., Mansour, M., Varma, M. and Al-Absy, M.S.M. (2024a), "Multiple behavioral conditions of the forward exchange rates and stock market return in the South Asian stock markets during COVID-19: a novel MT-QARDL approach", *Computation*, Vol. 12 No. 12, p. 233, doi: 10.3390/computation12120233.

Tabash, M.I., AsadUllah, M., Siddiq, Q., Mansour, M., Daniel, L.N. and Al-Absy, M.S.M. (2024b), "Symmetries or asymmetries: how MSCI index advanced European markets' exchange rates respond to macro-economic fundamentals", *Economies*, Vol. 12 No. 12, p. 326, doi: 10.3390/economies12120326.

Tabash, M.I., Issa, S.S., Mansour, M., Saleh, M.W., Rahrouh, M., AlQeisi, K. and Al-Absy, M.S.M. (2025), "Dynamic shock-transmission mechanism between US trade policy uncertainty and sharia-compliant stock market volatility of GCC economies", *Risks*, Vol. 13 No. 3, p. 56, doi: 10.3390/risks13030056.

Wang, C., Chen, Y., Zhang, S. and Zhang, Q. (2022), "Stock market index prediction using deep Transformer model", *Expert Systems with Applications*, Vol. 208, 118128, doi: 10.1016/j.eswa.2022.118128.

Wang, W., Lv, J., Feng, Y., Li, X. and Li, S. (2023), "Intelligent model prediction of fluctuant increase of maximum electric field in XLPE insulation using long short-term memory network algorithm", *High Voltage*, Vol. 8 No. 1, pp. 70-80, doi: 10.1049/hve2.12242.

Xiao, C., Xia, W. and Jiang, J. (2020), "Stock price forecast based on combined model of ARI-MA-LS-SVM", *Neural Computing and Applications*, Vol. 32 No. 10, pp. 5379-5388, doi: 10.1007/s00521-019-04698-5.

Xu, Y., Li, Z., Wang, S., Li, W., Sarkodie-Gyan, T. and Feng, S. (2021), "A hybrid deep-learning model for fault diagnosis of rolling bearings", *Measurement*, Vol. 169, 108502, doi: 10.1016/j.measurement.2020.108502.

Yoshihara, A., Fujikawa, K., Seki, K. and Uehara, K. (2014), "Predicting stock market trends by recurrent deep neural networks", *PRICAI 2014: Trends in Artificial Intelligence: 13th Pacific Rim International Conference on Artificial Intelligence*, Australia, December 1-5, 2014, Gold Coast, QLD, doi: 10.1007/978-3-319-13560-1_60.

Yu, Y., Si, X., Hu, C. and Zhang, J. (2019), "A review of recurrent neural networks: LSTM cells and network architectures", *Neural Computation*, Vol. 31 No. 7, pp. 1235-1270, doi: 10.1162/neco_a_01199.

Corresponding author
Gagan Kukreja can be contacted at: gkukreja@uob.edu.bh

For instructions on how to order reprints of this article, please visit our website:
www.emeraldgrouppublishing.com/licensing/reprints.htm
Or contact us for further details: **permissions@emeraldinsight.com**

Downloaded from http://www.emerald.com/jbsed/article-pdf/6/1/70/10049847/jbsed-05-2025-0134en.pdf by guest on 06 February 2026